MANHOLE EXCEEDING 6m DEPTH TO SOFFIT - ANGLIAN WATER PREFERRED ARRANGEMENT

Rigid material construction with concrete surround

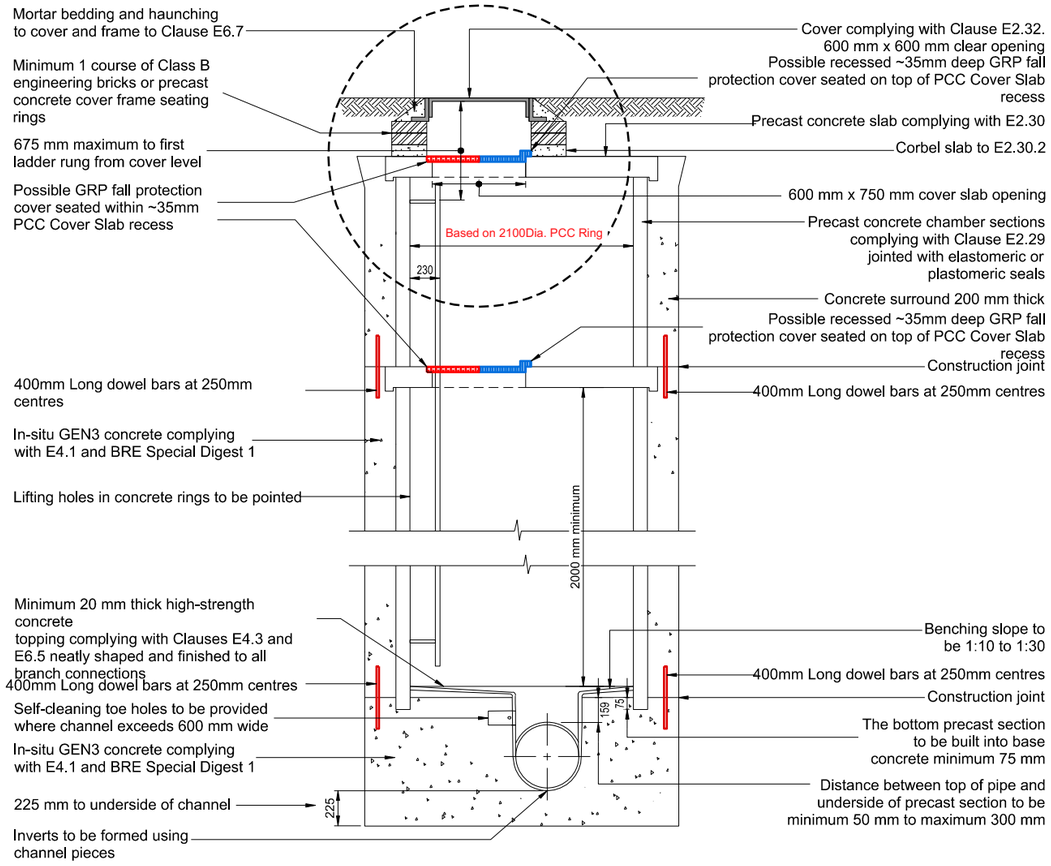

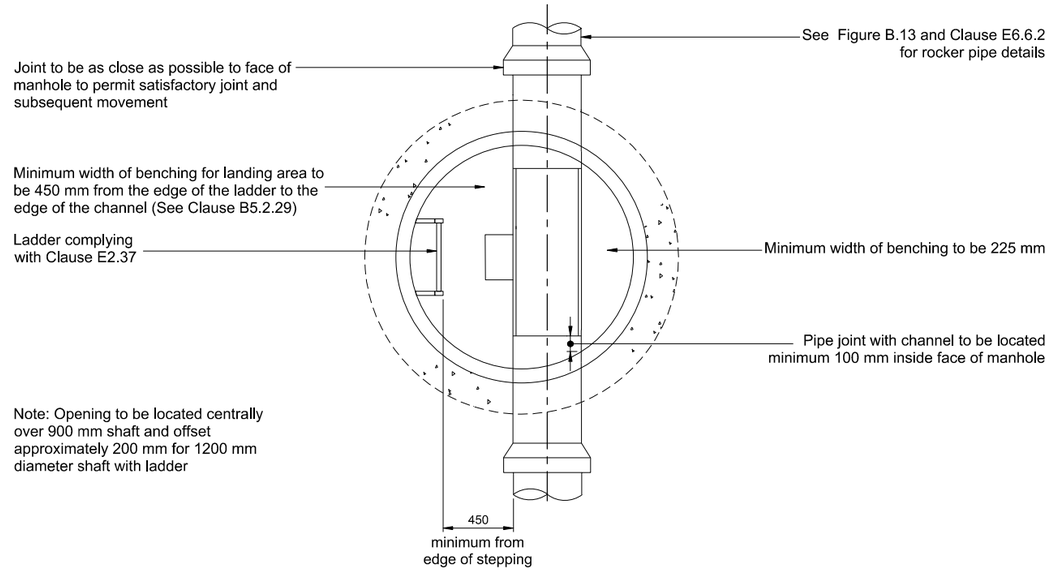

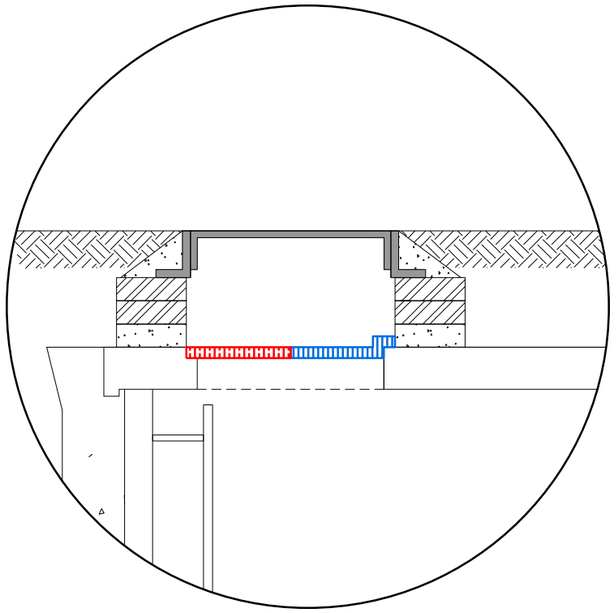

For discussion purposes only